stay connected

AS-I AND 2X AUX. POWER DISTRIBUTER FOR MASI68

MASI68 passive distribution box
2× Aux. Power
7/8"
Connection cables are in the online shop under "Connection Technology".
Housing fully potted.

Länk till produkt

Illustration

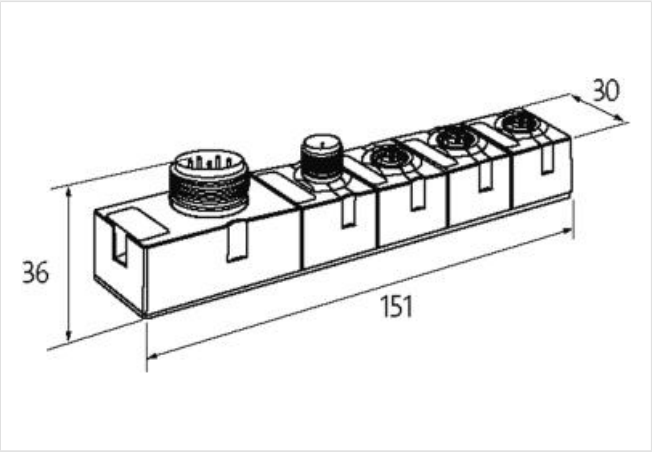

Produkten kan skilja sig från bilden

Kommersiella uppgifter

ECLASS-6.0	27279219
ECLASS-6.1	27279219
ECLASS-7.0	27279219
ECLASS-8.0	27279219
ECLASS-9.0	27440108
ECLASS-10.1	27440111
ECLASS-11.1	27440111
ECLASS-12.0	27440111
ETIM-5.0	EC002585
Förpackningsenhet	1
GTIN	4048879373517
Kundens tullnummer	85176200

Electrical data | Supply

Operating voltage external DC min.	18 V
Operating voltage external DC max.	30 V
Bus voltage AS-Interface DC min.	26,5 V
Bus voltage AS-Interface DC max.	31,6 V
Current consumption AS-i port max.	4000 mA
Total current max.	8 A

Device protection | Electrical

Degree of protection (EN IEC 60529)	IP68
Mechanical data | Mounting data	
Suitable for mounting type	2-hole screw mounting
Height	151 mm
Width	30 mm
Depth	34,5 mm
Environmental characteristics | Climatic	
Operating temperature min.	-20 °C
Operating temperature max.	60 °C
Storage temperature min.	-20 °C
Storage temperature max.	70 °C
Connection type 4	
Connection type 1	2
Connection type 2	0, 1
Connection type 3	Asi In
Connection type 4	Power In
Family construction form	M12
Gender	female
Color contact carrier	black
Coding	A
No. of poles	5
PIN 1	AS-i +
PIN 2	0 V (UA 1)
PIN 3	AS-i -
PIN 4	24 V DC (UA 1)
PIN 5	n.c.
Family construction form	M12
Gender	female
Color contact carrier	black
Coding	A
No. of poles	5
PIN 1	AS-i +
PIN 2	0 V (UA 0)
PIN 3	AS-i -
PIN 4	24 V DC (UA 0)
PIN 5	n.c.
Family construction form	M12
Gender	male
Color contact carrier	black
Coding	D
No. of poles	4
PIN 1	AS-i +
PIN 2	n.c.
PIN 3	AS-i -
PIN 4	n.c.
Family construction form	7/8"
Gender	male
Color contact carrier	black
No. of poles	5
PIN 1	24 V DC (UA 0)
PIN 2	0 V (UA 0)
PIN 3	PE
PIN 4	24 V DC (UA 1)

PIN 5	0 V (UA 1)