stay connected

MPUUW ANALOG COUPLER COMPONENT

IN: 0..10 V - OUT: 0..10 V / 300 mA

INPUT: 0...10 V DC
OUTPUT: 0...10 V DC, 300 mA
Screw terminals
This product is a processing component and must only be used by authorized manufacturers or people.
Input and output galvanically separated

Länk till produkt

Illustration

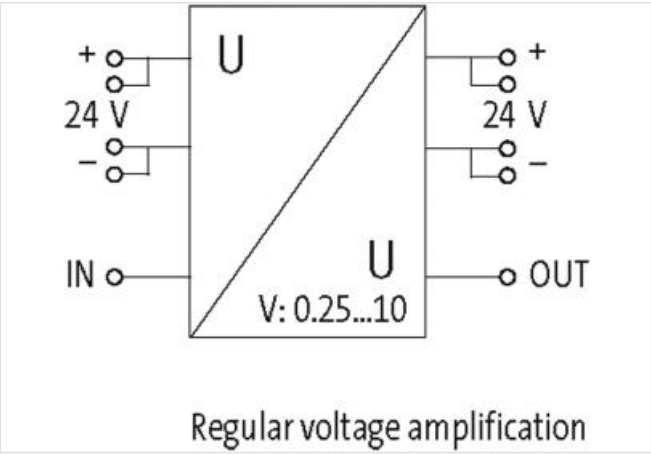

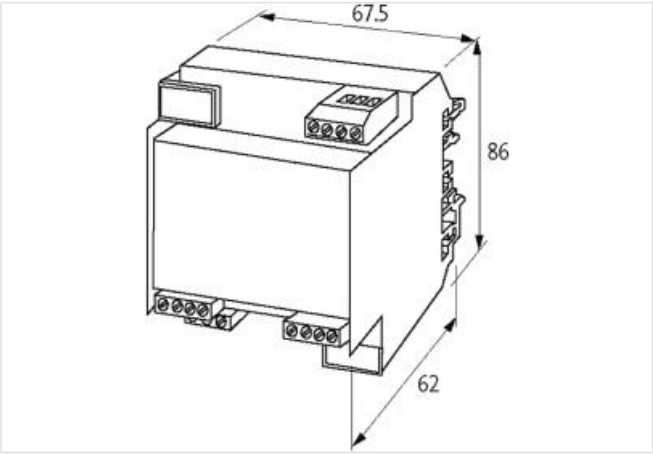

Produkten kan skilja sig från bilden

Kommersiella uppgifter

ECLASS-6.0	27210990
ECLASS-6.1	27210901
ECLASS-7.0	27210901
ECLASS-8.0	27210901
ECLASS-9.0	27210901

ECLASS-10.1	27210901
ECLASS-11.1	27210901
ECLASS-12.0	27210901
ETIM-5.0	EC002477
Förpackningsenhet	1
GTIN	4048879028516
Kundens tullnummer	85437090
Electrical data	
Accuracy (of full scale)	0,5 %
Electrical data | Supply	
Operating voltage DC	24 V
Operating voltage DC min.	19,2 V
Operating voltage DC max.	28,8 V
Operating current max.	300 mA
Electrical data | Input	
Input resistor	10 kΩ
Electrical data | Output	
Output current max.	0,3 A
Industrial communication	
Transmission frequency max.	1000 Hz
Mechanical data | Mounting data	
Mounting method	geschnappt
Suitable for mounting type	mounting rail, (EN 60715)
Height	62 mm
Width	43 mm
Depth	67,5 mm
Environmental characteristics | Climatic	
Operating temperature min.	0 °C
Operating temperature max.	50 °C
Connection type 2	
Connection type 1	Input / Output
Connection	Screw terminals SK
Family construction form	terminal
Gender	female
No. of poles	5
PIN 1	+
PIN 2	+
PIN 3	-
PIN 4	-
PIN 5	In
Connection	Screw terminals SK
Family construction form	terminal
Gender	female
No. of poles	5
PIN 1	+
PIN 2	+
PIN 3	-
PIN 4	-
PIN 5	Out