SUPPRESSOR FOR SIEMENS CONTACTOR

VDR+RC, 24…48 VAC/DC, 20 VA/W

24 V AC/DC
RC + Varistor

Länk till produkt

Illustration

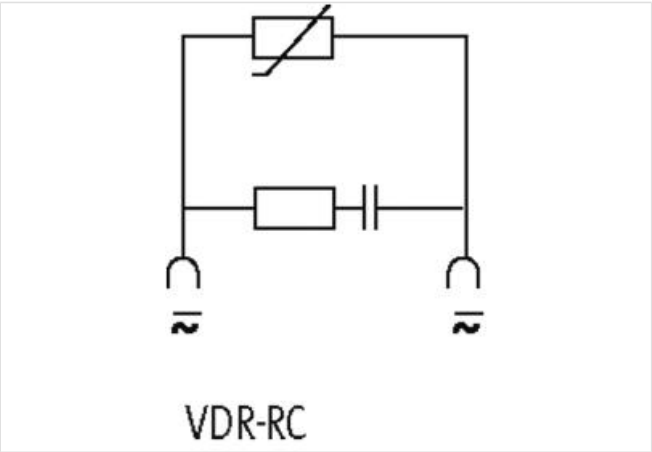

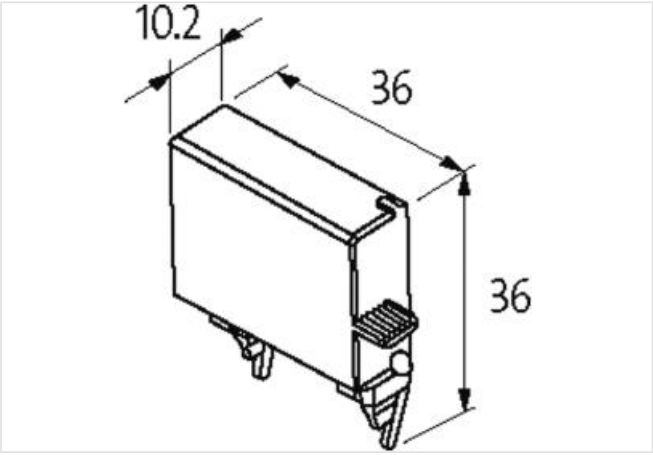

Produkten kan skilja sig från bilden

Kommersiella uppgifter

ECLASS-6.0	27371013
ECLASS-6.1	27371013
ECLASS-7.0	27371013
ECLASS-8.0	27371013
ECLASS-9.0	27371013
ECLASS-10.1	27371013
ECLASS-11.1	27371013
ECLASS-12.0	27371013

ETIM-5.0	EC002498
Förpackningsenhet	1
GTIN	4048879019934
Kundens tullnummer	85363010
Compatibility | Compatible with	
Appropriate contactors	3 RT 1.3/1.4
Electrical data	
Damping factor	1.5× UN
Electrical data | Input	
Input voltage AC min.	24 V
Input voltage AC max.	70 V
Input voltage DC min.	24 V
Input voltage DC max.	70 V
Installation | Connection	
Connection information	Plug contact
Device protection | Media	
Flame resistance	flame retardant
Mechanical data | Material data	
Combustibility class housing (UL94)	V-0
Material housing	Plastic
Mechanical data | Mounting data	
Height	36 mm
Width	10,2 mm
Depth	36 mm
Environmental characteristics | Climatic	
Operating temperature min.	-20 °C
Operating temperature max.	70 °C